TPS62088, 2.4-V to 5.5-V Input, Tiny 6-pin 3-A Step-Down Converter in 1.2-mm x 0.8-mm Wafer Chip Scale Package and Suitable for Embedding

1 Features

- DCS-Control topology
- Up to 95% efficiency
- 26-mΩ and 26-mΩ internal power MOSFETs
- 2.4-V to 5.5-V input voltage range
- 4-µA operating quiescent current
- 1% output voltage accuracy
- 4-MHz switching frequency
- Power save mode for light-load efficiency
- 100% duty cycle for lowest dropout
- Active output discharge
- Power good output
- Thermal shutdown protection
- Hiccup short-circuit protection
- Available in 6-pin WCSP and PowerWCSP with 0.4-mm pitch
- 0.3-mm tall YWC package supports embedded systems
- Supports 12 mm^2 solution size
- Supports < 0.6 mm height solution
- Create a custom design using the TPS62088 with the WEBENCH® Power Designer

2 Applications

- Solid-state drives
- Wearable products
- Smart phones
- Camera modules
- Optical modules

3 Description

The TPS62088 device is a high-frequency synchronous step-down converter optimized for small solution size and high efficiency. With an input voltage range of 2.4 V to 5.5 V, common battery technologies are supported. At medium to heavy loads, the converter operates in PWM mode and automatically enters Power Save Mode operation at light load to maintain high efficiency over the entire load current range. The 4-MHz switching frequency allows TPS62088 to use small external components. Together with its DCS-control architecture, excellent load transient performance and output voltage regulation accuracy are achieved. Other features like over current protection, thermal shutdown protection, active output discharge and power good are built-in. The device is available in a 6-pin WCSP package.

Device Information(1)

PART NUMBER	PACKAGE	BODY SIZE (NOM)
TPS62088xx	YFP (6)	0.8mm x 1.2mm x 0.5mm
	YWC (6)	0.8mm x 1.2mm x 0.3mm

(1) For all available packages, see the orderable addendum at the end of the data sheet.

Typical Application Schematic

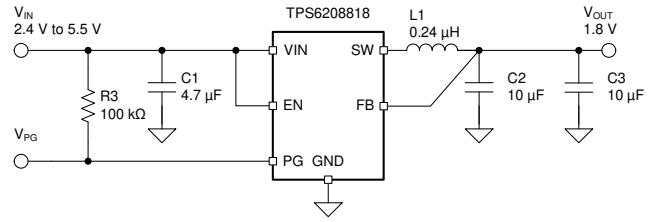

Copyright © 2017, Texas Instruments Incorporated

3.3-V Input Voltage Efficiency

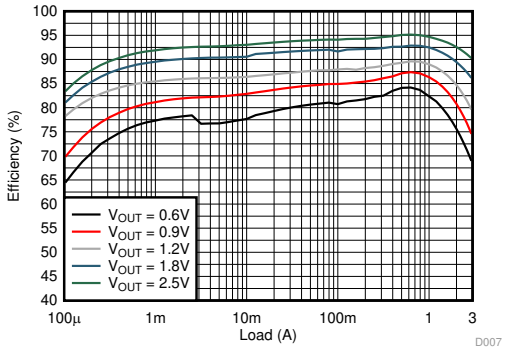

An IMPORTANT NOTICE at the end of this data sheet addresses availability, warranty, changes, use in safety-critical applications, intellectual property matters and other important disclaimers. PRODUCTION DATA.

Table of Contents

1 **Features** ... 1
2 **Applications** ... 1
3 **Description** ... 1
4 **Revision History** ... 2
5 **Device Options** ... 3
6 **Pin Configuration and Functions** ... 3
7 **Specifications** ... 4
7.1 Absolute Maximum Ratings ... 4
7.2 ESD Ratings ... 4
7.3 Recommended Operating Conditions ... 4
7.4 Thermal Information ... 4
7.5 ELECTRICAL CHARACTERISTICS ... 4
7.6 Typical Characteristics ... 6
8 **Detailed Description** ... 7
8.1 Overview ... 7
8.2 Functional Block Diagram ... 7
8.3 Feature Description ... 7
8.4 Device Functional Modes ... 9
9 **Application and Implementation** ... 10
9.1 Application Information ... 10
9.2 Typical Application ... 10
10 **Power Supply Recommendations** ... 16
11 **Layout** ... 16
11.1 Layout Guidelines ... 16
11.2 Layout Example ... 17
11.3 Thermal Considerations ... 17
12 **Device and Documentation Support** ... 18
12.1 Device Support ... 18
12.2 Documentation Support ... 18
12.3 Community Resources ... 18
12.4 Trademarks ... 18
12.5 Electrostatic Discharge Caution ... 18
12.6 Glossary ... 18
13 **Mechanical, Packaging, and Orderable Information** ... 19

4 Revision History

NOTE: Page numbers for previous revisions may differ from page numbers in the current version.

Changes from Revision C (May 2019) to Revision D	Page
• Changed TPS62088YWC status to production	1
• Added TPS62088YWCEVM-084 to the *Thermal information* table	4

Changes from Revision B (August 2018) to Revision C	Page
• Added YWC package option	1
• Added YWC package drawing	3
• Updated the device operation limitation	4
• Changed Updated the thermal metric for YFP and YWC package	4
• Added typical blanking time and deglitch delay of PG	9

Changes from Revision A (March 2018) to Revision B	Page
• Changed the Packaging Information pages	23

Changes from Original (November 2017) to Revision A	Page
• Changed TPS6208812, TPS6208818, and TPS6208833 From: Preview To: Production in the *Device Information* table	1
• Added TPS62088EVM-814 to the *Thermal information* table	4
• Changed the symbol for the feed forward capacitor, from C3 to C4 and from 0.012 to 12 µ in Equation 4	12

Copyright © 2017–2019, Texas Instruments Incorporated

5 Device Options

Device Options

PART NUMBER (1)	OUTPUT VOLTAGE
TPS62088YFP	Adjustable
TPS62088YWC	Adjustable
TPS6208812YFP	1.2 V
TPS6208818YFP	1.8 V
TPS6208833YFP	3.3 V

(1) For detailed ordering information, please check the *PACKAGE OPTION ADDENDUM* section at the end of this datasheet.

6 Pin Configuration and Functions

YFP Package
Top View

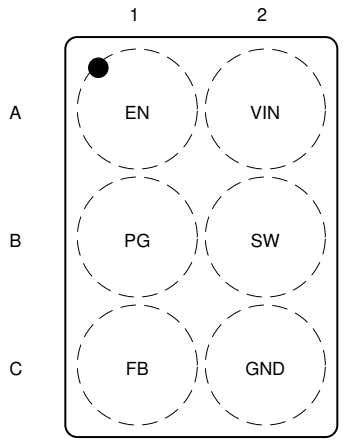

YWC Package
Top View

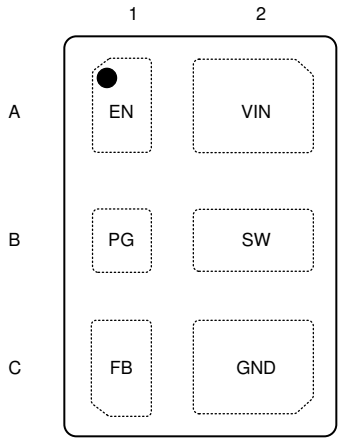

Pin Functions

PIN		I/O	DESCRIPTION
NAME	NO.		
EN	A1	I	Device enable pin. To enable the device, this pin needs to be pulled high. Pulling this pin low disables the device. Do not leave floating.
PG	B1	O	Power good open drain output pin. The pull-up resistor can be connected to voltages up to 5.5 V. If unused, leave it floating.
FB	C1	I	Feedback pin. For the fixed output voltage versions, this pin must be connected to the output.
GND	C2	-	Ground pin.
SW	B2	O	Switch pin of the power stage.
VIN	A2	I	Input voltage pin.

7 Specifications

7.1 Absolute Maximum Ratings[1]

		MIN	MAX	UNIT
Voltage at Pins[2]	VIN, FB, EN, PG	–0.3	6	V
	SW (DC)	–0.3	V_{IN} + 0.3	
	SW (DC, in current limit)	–1.0	V_{IN} + 0.3	
	SW (AC, less than 10ns)[3]	–2.5	10	
Temperature	Operating Junction, T_J	–40	150	°C
	Storage, T_{stg}	–65	150	

(1) Stresses beyond those listed under *Absolute Maximum Ratings* may cause permanent damage to the device. These are stress ratings only and functional operation of the device at these or any other conditions beyond those indicated under *Recommended Operating Conditions* is not implied. Exposure to absolute–maximum–rated conditions for extended periods may affect device reliability.
(2) All voltage values are with respect to network ground terminal.
(3) While switching

7.2 ESD Ratings

			VALUE	UNIT
$V_{(ESD)}$	Electrostatic discharge	Human body model (HBM), per ANSI/ESDA/JEDEC JS-001[1]	±2000	V
		Charged device model (CDM), per JEDEC specification JESD22-C101[2]	±500	

(1) JEDEC document JEP155 states that 500-V HBM allows safe manufacturing with a standard ESD control process.
(2) JEDEC document JEP157 states that 250-V CDM allows safe manufacturing with a standard ESD control process.

7.3 Recommended Operating Conditions

		MIN	NOM	MAX	UNIT
V_{IN}	Input voltage range	2.4		5.5	V
V_{OUT}	Output voltage range	0.6		4	V
I_{OUT}	Output current range[1]	0		3	A
I_{SINK_PG}	Sink current at PG pin			1	mA
V_{PG}	Pull-up resistor voltage			5.5	V
T_J	Operating junction temperature	–40		125	°C

(1) For YFP package versions, lifetime is reduced when operating continuously at 3-A output current with the junction temperature higher than 85 °C.

7.4 Thermal Information

THERMAL METRIC[1]		TPS62088				UNIT
		YFP (6-PINS)	YWC (6-PINS)	YFP EVM-814	YWC EVM-084	
$R_{\theta JA}$	Junction-to-ambient thermal resistance	141.3	130.9	85.7	70.6	°C/W
$R_{\theta JC(top)}$	Junction-to-case (top) thermal resistance	1.7	1.1	n/a[2]	n/a[2]	°C/W
$R_{\theta JB}$	Junction-to-board thermal resistance	47.3	27.3	n/a[2]	n/a[2]	°C/W
ψ_{JT}	Junction-to-top characterization parameter	0.5	0.7	1.9	0.5	°C/W
ψ_{JB}	Junction-to-board characterization parameter	47.5	27.2	55.9	38.7	°C/W

(1) For more information about traditional and new thermal metrics, see the *Semiconductor and IC Package Thermal Metrics* application report.
(2) Not applicable to an EVM.

7.5 ELECTRICAL CHARACTERISTICS

T_J = -40 °C to 125 °C, and V_{IN} = 2.4 V to 5.5 V. Typical values are at T_J = 25 °C and V_{IN} = 5 V , unless otherwise noted.

PARAMETER		TEST CONDITIONS	MIN	TYP	MAX	UNIT
SUPPLY						
I_Q	Quiescent current	EN = High, no load, device not switching		4	10	µA
I_{SD}	Shutdown current	EN = Low, T_J = -40℃ to 85℃		0.05	0.5	µA

Copyright © 2017–2019, Texas Instruments Incorporated

ELECTRICAL CHARACTERISTICS (continued)

T_J = -40 °C to 125 °C, and V_{IN} = 2.4 V to 5.5 V. Typical values are at T_J = 25 °C and V_{IN} = 5 V , unless otherwise noted.

PARAMETER		TEST CONDITIONS	MIN	TYP	MAX	UNIT
V_{UVLO}	Under voltage lock out threshold	V_{IN} falling	2.1	2.2	2.3	V
	Under voltage lock out hysteresis	V_{IN} rising		160		mV
T_{JSD}	Thermal shutdown threshold	T_J rising		150		°C
	Thermal shutdown hysteresis	T_J falling		20		°C
LOGIC INTERFACE EN						
V_{IH}	High-level input threshold voltage		1.0			V
V_{IL}	Low-level input threshold voltage				0.4	V
$I_{EN,LKG}$	Input leakage current into EN pin			0.01	0.1	µA
SOFT START, POWER GOOD						
t_{SS}	Soft start time	Time from EN high to 95% of V_{OUT} nominal		1.25		ms
V_{PG}	Power good lower threshold	V_{PG} rising, V_{FB} referenced to V_{FB} nominal	94	96	98	%
		V_{PG} falling, V_{FB} referenced to V_{FB} nominal	90	92	94	%
	Power good upper threshold	V_{PG} rising, V_{FB} referenced to V_{FB} nominal	103	105	107	%
		V_{PG} falling, V_{FB} referenced to V_{FB} nominal	108	110	112	%
$V_{PG,OL}$	Low-level output voltage	I_{sink} = 1 mA			0.4	V
$I_{PG,LKG}$	Input leakage current into PG pin	V_{PG} = 5.0 V		0.01	0.1	µA
OUTPUT						
V_{OUT}	Output voltage accuracy	TPS6208812, PWM mode	1.188	1.2	1.212	V
		TPS6208818, PWM mode	1.782	1.8	1.818	
		TPS6208833, PWM mode	3.267	3.3	3.333	
V_{FB}	Feedback regulation voltage	PWM mode	594	600	606	mV
$I_{FB,LKG}$	Feedback input leakage current	TPS62088, V_{FB} = 0.6 V		0.01	0.05	µA
R_{FB}	Internal resistor divider connected to FB pin	TPS6208812, TPS6208818, TPS6208833		7.5		MΩ
I_{DIS}	Output discharge current	V_{SW} = 0.4V; EN = LOW	75	400		mA
POWER SWITCH						
$R_{DS(on)}$	High-side FET on-resistance			26		mΩ
	Low-side FET on-resistance			26		mΩ
I_{LIM}	High-side FET switch current limit		3.6	4.3	5.0	A
f_{SW}	PWM switching frequency	I_{OUT} = 1 A, V_{OUT} = 1.8 V		4		MHz

Copyright © 2017–2019, Texas Instruments Incorporated

7.6 Typical Characteristics

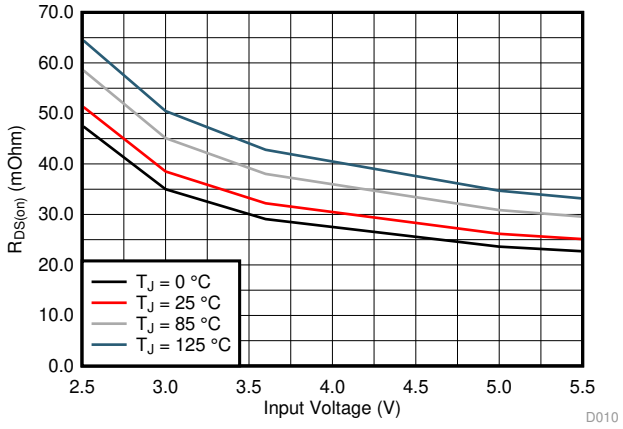

Figure 1. High-Side FET On-Resistance

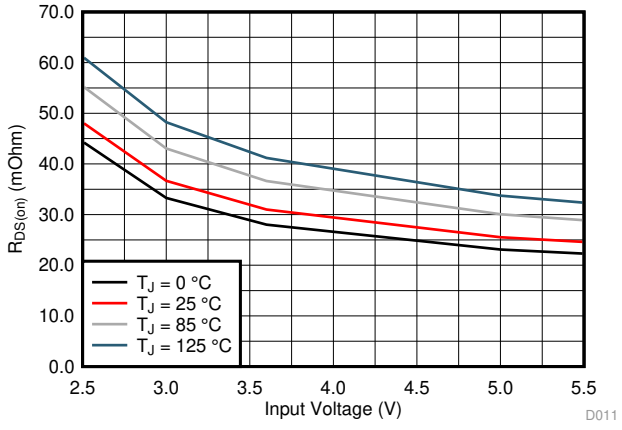

Figure 2. Low-Side FET On-Resistance

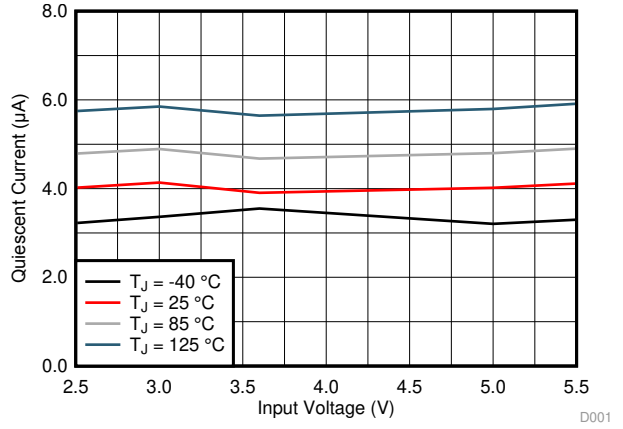

Figure 3. Quiescent Current

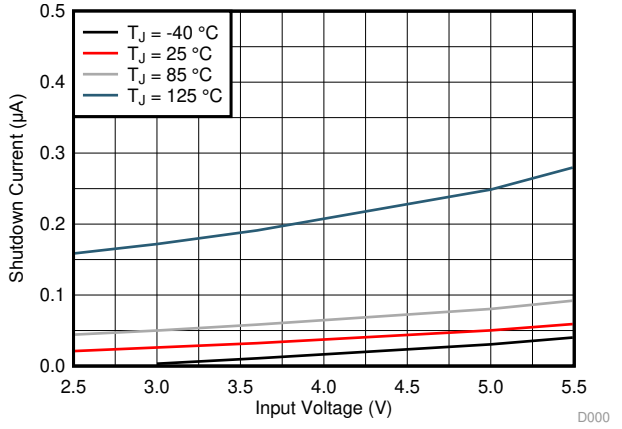

Figure 4. Shutdown Current

Copyright © 2017–2019, Texas Instruments Incorporated

8 Detailed Description

8.1 Overview

The TPS62088 synchronous step-down converter adopts a new generation DCS-Control (Direct Control with Seamless transition into Power Save Mode) topology without the output voltage sense (VOS) pin. This is an advanced regulation topology that combines the advantages of hysteretic, voltage, and current mode control schemes.

The DCS-Control topology operates in PWM (pulse width modulation) mode for medium to heavy load conditions and in Power Save Mode at light load currents. In PWM mode, the converter operates with its nominal switching frequency of 4 MHz, having a controlled frequency variation over the input voltage range. As the load current decreases, the converter enters Power Save Mode, reducing the switching frequency and minimizing the IC current consumption to achieve high efficiency over the entire load current range. Because DCS-Control supports both operation modes (PWM and PFM) within a single building block, the transition from PWM mode to Power Save Mode is seamless and without effects on the output voltage. The devices offer both excellent DC voltage and superior load transient regulation, combined with very low output voltage ripple, minimizing interference with RF circuits.

8.2 Functional Block Diagram

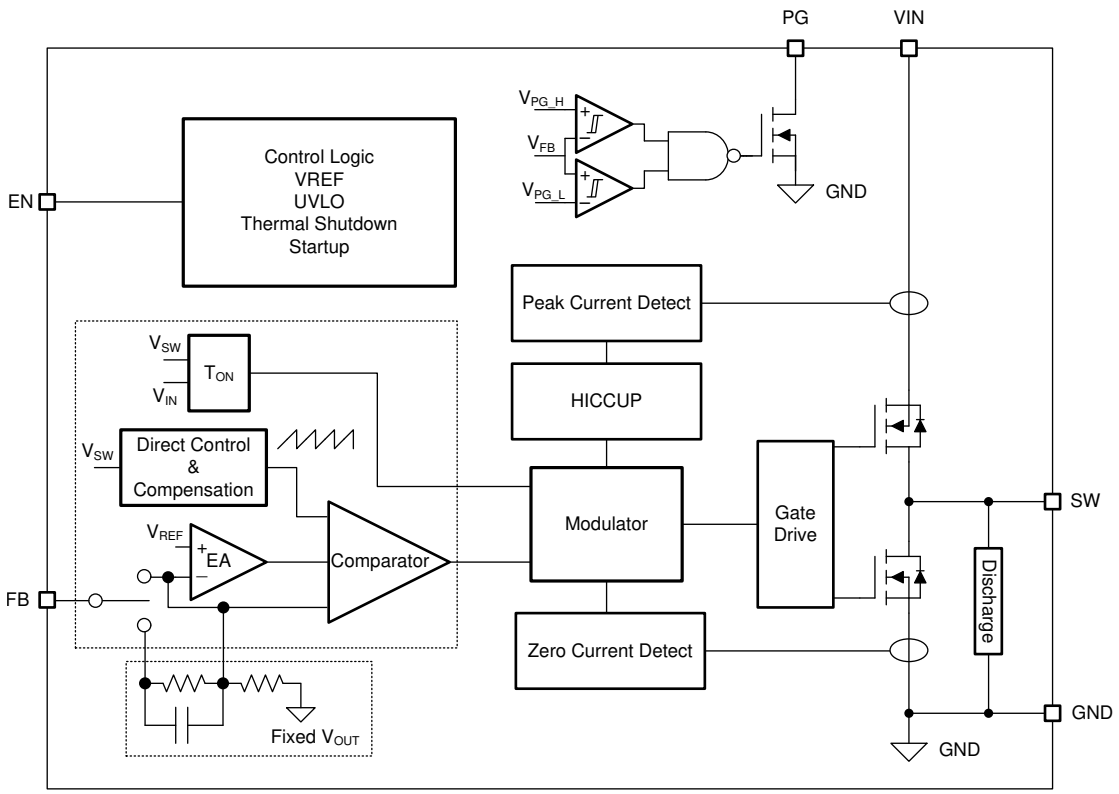

8.3 Feature Description

8.3.1 Power Save Mode

As the load current decreases, the device enters Power Save Mode operation. The power save mode occurs when the inductor current becomes discontinuous. Power Save Mode is based on a fixed on-time architecture, as related in Equation 1.

$$t_{ON} = 250ns \times \frac{V_{OUT}}{V_{IN}} \tag{1}$$

Feature Description (continued)

In Power Save Mode, the output voltage rises slightly above the nominal output voltage. This effect is minimized by increasing the output capacitor or inductor value.

When the device operates close to 100% duty cycle mode, the device can't enter Power Save Mode regardless of the load current if the input voltage decreases to typically 10% above the output voltage. The device maintains output regulation in PWM mode.

8.3.2 100% Duty Cycle Low Dropout Operation

The devices offer low input-to-output voltage difference by entering 100% duty cycle mode. In this mode, the high-side MOSFET switch is constantly turned on and the low-side MOSFET is switched off. This is particularly useful in battery powered applications to achieve the longest operation time by taking full advantage of the whole battery voltage range. The minimum input voltage to maintain output regulation, depending on the load current and output voltage can be calculated as:

$$V_{IN,MIN} = V_{OUT} + I_{OUT,MAX} \times (R_{DS(on)} + R_L) \quad (2)$$

where

- $V_{IN,MIN}$ = Minimum input voltage to maintain an output voltage
- $I_{OUT,MAX}$ = Maximum output current
- $R_{DS(on)}$ = High-side FET ON-resistance
- R_L = Inductor ohmic resistance (DCR)

8.3.3 Soft Start

After enabling the device, there is a 250-µs delay before switching starts. Then, an internal soft startup circuitry ramps up the output voltage which reaches nominal output voltage during the startup time of 1 ms. This avoids excessive inrush current and creates a smooth output voltage rise slope. It also prevents excessive voltage drops of primary cells and rechargeable batteries with high internal impedance.

The device is able to start into a pre-biased output capacitor. It starts with the applied bias voltage and ramps the output voltage to its nominal value.

8.3.4 Switch Current Limit and HICCUP Short-Circuit Protection

The switch current limit prevents the device from high inductor current and from drawing excessive current from the battery or input voltage rail. Excessive current might occur with a shorted or saturated inductor or a heavy load or shorted output circuit condition. If the inductor current reaches the threshold I_{LIM}, the high-side MOSFET is turned off and the low-side MOSFET remains off, while the inductor current flows through its body diode and quickly ramps down.

When this switch current limits is triggered 32 times, the device stops switching. The device then automatically starts a new start-up after a typical delay time of 128 µs has passed. This is named HICCUP short-circuit protection. The device repeats this mode until the high load condition disappears.

8.3.5 Undervoltage Lockout

To avoid mis-operation of the device at low input voltages, under voltage lockout is implemented that shuts down the device at voltages lower than V_{UVLO}.

8.3.6 Thermal Shutdown

The device goes into thermal shutdown and stops the power stage switching when the junction temperature exceeds T_{JSD}. When the device temperature falls below the threshold by 20°C, the device returns to normal operation automatically by switching the power stage again.

Copyright © 2017–2019, Texas Instruments Incorporated

8.4 Device Functional Modes

8.4.1 Enable and Disable

The device is enabled by setting the EN pin to a logic High. Accordingly, shutdown mode is forced if the EN pin is pulled Low with a shutdown current of typically 50 nA. In shutdown mode, the internal power switches as well as the entire control circuitry are turned off. An internal switch smoothly discharges the output through the SW pin in shutdown mode. Do not leave the EN pin floating.

The typical threshold value of the EN pin is 0.89 V for rising input signal, and 0.62 V for falling input signal.

8.4.2 Power Good

The device has a power good output. The PG pin goes high impedance once the FB pin voltage is above 96% and less than 105% of the nominal voltage, and is driven low once the voltage falls below typically 92% or higher than 110% of the nominal voltage. The PG pin is an open-drain output and is specified to sink up to 1 mA. The power good output requires a pull-up resistor connecting to any voltage rail less than 5.5 V.

The PG signal can be used for sequencing of multiple rails by connecting it to the EN pin of other converters. Leave the PG pin unconnected when not used. The PG rising edge has a 100-µs blanking time and the PG falling edge has a deglitch delay of 20 µs.

Table 1. PG Pin Logic

DEVICE CONDITIONS		LOGIC STATUS	
		HIGH IMPEDANCE	LOW
Enable	EN = High, $V_{FB} \geq 0.576$ V	√	
	EN = High, $V_{FB} \leq 0.552$ V		√
	EN = High, $V_{FB} \leq 0.63$ V	√	
	EN = High, $V_{FB} \geq 0.66$ V		√
Shutdown	EN = Low		√
Thermal Shutdown	$T_J > T_{JSD}$		√
UVLO	$0.7\ V < V_{IN} < V_{UVLO}$		√
Power Supply Removal	$V_{IN} < 0.7$ V	undefined	

9 Application and Implementation

NOTE

Information in the following applications sections is not part of the TI component specification, and TI does not warrant its accuracy or completeness. TI's customers are responsible for determining suitability of components for their purposes. Customers should validate and test their design implementation to confirm system functionality.

9.1 Application Information

The following section discusses the design of the external components to complete the power supply design for several input and output voltage options by using typical applications as a reference.

9.2 Typical Application

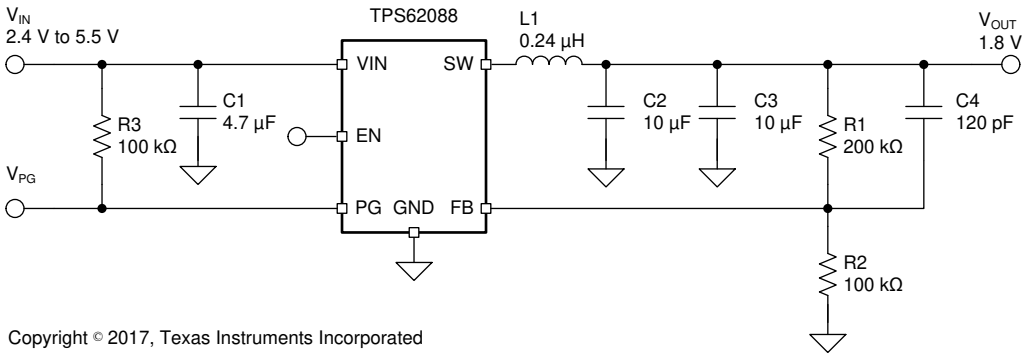

Figure 5. Typical Application of Adjustable Output

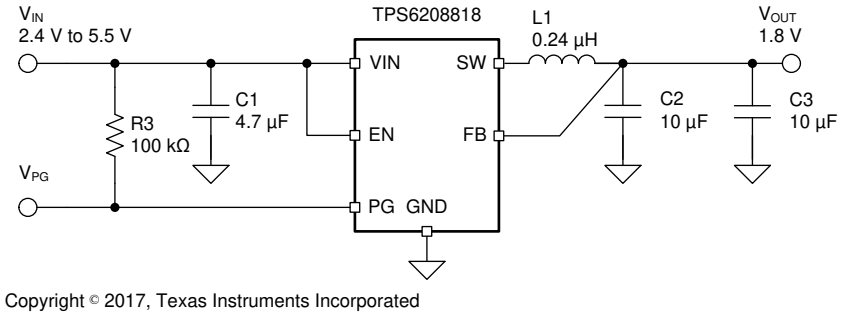

Figure 6. Typical Application of Fixed Output

9.2.1 Design Requirements

For this design example, use the parameters listed in Table 2 as the input parameters.

Table 2. Design Parameters

DESIGN PARAMETER	EXAMPLE VALUE
Input voltage	2.4 V to 5.5 V
Output voltage	1.8 V
Maximum peak output current	3 A

Copyright © 2017–2019, Texas Instruments Incorporated

Table 3 lists the components used for the example.

Table 3. List of Components of Figure 5

REFERENCE	DESCRIPTION	MANUFACTURER(1)
C1	4.7 µF, Ceramic capacitor, 6.3 V, X7R, size 0603, JMK107BB7475MA	Taiyo Yuden
C2, C3	10 µF, Ceramic capacitor, 10 V, X7R, size 0603, GRM188Z71A106MA73D	Murata
C4	120 pF, Ceramic capacitor, 50 V, size 0603, GRM1885C1H121JA01D	Murata
L1	0.24 µH, Power Inductor, size 0603, DFE160810S-R24M (DFE18SANR24MG0)	Murata
R1	Depending on the output voltage, 1%, size 0603	Std
R2	100 kΩ, Chip resistor, 1/16 W, 1%, size 0603	Std
R3	100 kΩ, Chip resistor, 1/16 W, 1%, size 0603	Std

(1) See Third-party Products disclaimer.

Table 4. List of Components of Figure 6, Smallest Solution

REFERENCE	DESCRIPTION	MANUFACTURER(1)
C1, C2, C3	10 µF, Ceramic capacitor, 6.3 V, X5R, size 0402, GRM155R60J106ME47	Murata
L1	0.24 µH, Power Inductor, size 0603, DFE160810S-R24M (DFE18SANR24MG0)	Murata
R3	100 kΩ, Chip resistor, 1/16 W, size 0402	Std

(1) See Third-party Products disclaimer.

9.2.2 Detailed Design Procedure

9.2.2.1 Custom Design With WEBENCH® Tools

Click here to create a custom design using the TPS62088 device with the WEBENCH® Power Designer.

1. Start by entering the input voltage (V_{IN}), output voltage (V_{OUT}), and output current (I_{OUT}) requirements.
2. Optimize the design for key parameters such as efficiency, footprint, and cost using the optimizer dial.
3. Compare the generated design with other possible solutions from Texas Instruments.

The WEBENCH Power Designer provides a customized schematic along with a list of materials with real-time pricing and component availability.

In most cases, these actions are available:

- Run electrical simulations to see important waveforms and circuit performance
- Run thermal simulations to understand board thermal performance
- Export customized schematic and layout into popular CAD formats
- Print PDF reports for the design, and share the design with colleagues

Get more information about WEBENCH tools at www.ti.com/WEBENCH.

9.2.2.2 Setting The Output Voltage

Choose resistors R1 and R2 to set the output voltage within a range of 0.6V to 4V, according to Equation 3. To keep the feedback (FB) net robust from noise, set R2 equal to or lower than 100 kΩ to have at least 0.6 µA of current in the voltage divider. Lower values of FB resistors achieve better noise immunity, and lower light load efficiency, as explained in the application note SLYT469.

$$R1 = R2 \times \left(\frac{V_{OUT}}{V_{FB}} - 1 \right) = R2 \times \left(\frac{V_{OUT}}{0.6V} - 1 \right) \tag{3}$$

For devices with a fixed output voltage, the FB pin must be connected to V_{OUT}. R1, R2 and C4 are not needed. The fixed output voltage devices have an internal feed forward capacitor.

9.2.2.3 Feed Forward Capacitor

A feed forward capacitor (C4) is required in parallel with R1. Equation 4 calculates the capacitor value. For the recommended 100k value for R2, a 120 pF feed forward capacitor is used.

$$C4 = \frac{12\ \mu s}{R2} \tag{4}$$

9.2.2.4 Output Filter Design

The inductor and the output capacitor together provide a low-pass filter. To simplify this process, Table 5 outlines possible inductor and capacitor value combinations for most applications. Checked cells represent combinations that are proven for stability by simulation and lab test. Further combinations should be checked for each individual application.

Table 5. Matrix of Output Capacitor and Inductor Combinations

NOMINAL L [µH](1)	NOMINAL C_{OUT} [µF](2)			
	10	2 x 10 or 1 x 22	47	100
0.24	+	+(3)	+	
0.33	+	+	+	
0.47				

(1) Inductor tolerance and current derating is anticipated. The effective inductance can vary by 20% and –30%.
(2) Capacitance tolerance and bias voltage derating is anticipated. The effective capacitance can vary by 20% and –50%.
(3) This LC combination is the standard value and recommended for most applications. Other '+' marks indicate recommended filter combinations. Other values may be acceptable in some applications but should be fully tested by the user.

9.2.2.5 Inductor Selection

The main parameter for the inductor selection is the inductor value and then the saturation current of the inductor. To calculate the maximum inductor current under static load conditions, Equation 5 is given.

$$I_{L,MAX} = I_{OUT,MAX} + \frac{\Delta I_L}{2}$$

$$\Delta I_L = V_{OUT} \times \frac{1 - \frac{V_{OUT}}{V_{IN}}}{L \times f_{SW}}$$

where

- $I_{OUT,MAX}$ = Maximum output current
- ΔI_L = Inductor current ripple
- f_{SW} = Switching frequency
- L = Inductor value (5)

It is recommended to choose a saturation current for the inductor that is approximately 20% to 30% higher than $I_{L,MAX}$. In addition, DC resistance and size should also be taken into account when selecting an appropriate inductor. Table 6 lists recommended inductors.

Table 6. List of Recommended Inductors(1)

Inductance [µH]	Current Rating [A]	Dimensions [L x W x H mm]	DC Resistance [mΩ]	Part Number
0.24	4.9	1.6 x 0.8 x 1.0	30	Murata, DFE160810S-R24M (DFE18SANR24MG0)
0.24	6.5	2.0 x 1.2 x 1.0	25	Murata, DFE201210U-R24M
0.24	4.9	1.6 x 0.8 x 0.8	22	Cyntec, HTEH16080H-R24MSR
0.25	9.7	4.0 x 4.0 x 1.2	7.64	Coilcraft, XFL4012-251ME
0.24	3.5	2.0 x 1.6 x 0.6	35	Wurth Electronics, 74479977124
0.24	3.5	2.0 x 1.6 x 0.6	35	Sunlord, MPM201606SR24M

(1) See Third-party Products disclaimer.

Copyright © 2017–2019, Texas Instruments Incorporated

9.2.2.6 Capacitor Selection

The input capacitor is the low-impedance energy source for the converters which helps to provide stable operation. A low ESR multilayer ceramic capacitor is recommended for best filtering and must be placed between VIN and GND as close as possible to those pins. For most applications, 4.7 µF is sufficient, though a larger value reduces input current ripple.

The architecture of the device allows the use of tiny ceramic output capacitors with low equivalent series resistance (ESR). These capacitors provide low output voltage ripple and are recommended. To keep its low resistance up to high frequencies and to get narrow capacitance variation with temperature, TI recommends using X7R or X5R dielectrics. The recommended typical output capacitor value is 2 x 10 µF or 1 x 22 µF; this capacitance can vary over a wide range as outline in the output filter selection table.

A feed forward capacitor is required for the adjustable version, as described in Setting The Output Voltage. This capacitor is not required for the fixed output voltage versions.

9.2.3 Application Curves

V_{IN} = 5.0 V, V_{OUT} = 1.8 V, T_A = 25 ºC, BOM = Table 3, unless otherwise noted.

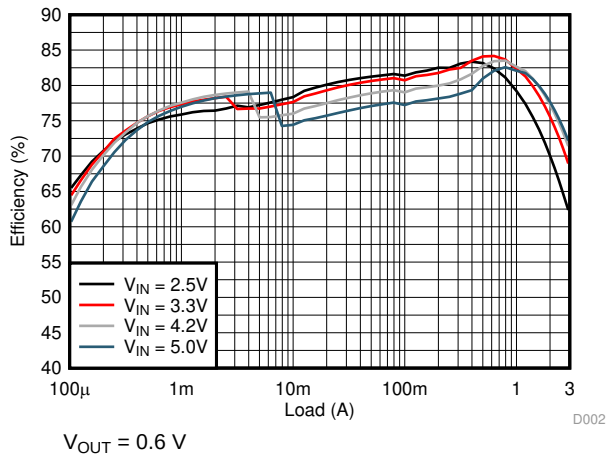

Figure 7. Efficiency

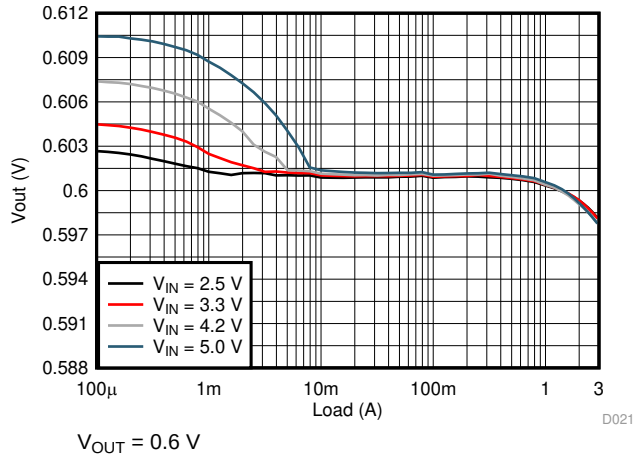

Figure 8. Load Regulation

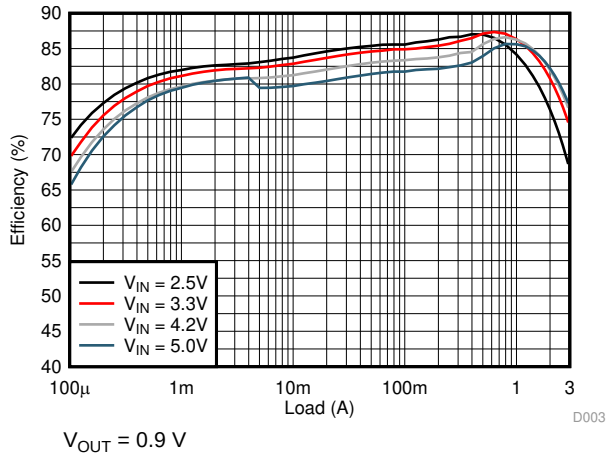

Figure 9. Efficiency

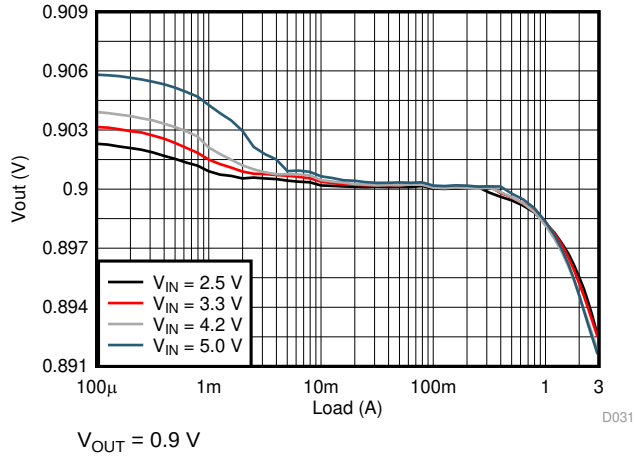

Figure 10. Load Regulation

V_{IN} = 5.0 V, V_{OUT} = 1.8 V, T_A = 25 ºC, BOM = Table 3, unless otherwise noted.

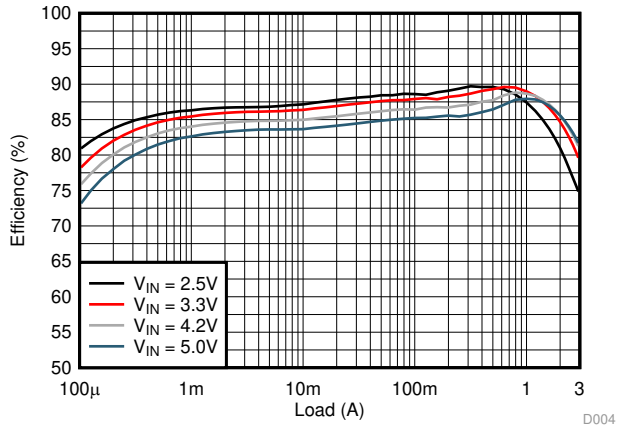

V_{OUT} = 1.2 V

Figure 11. Efficiency

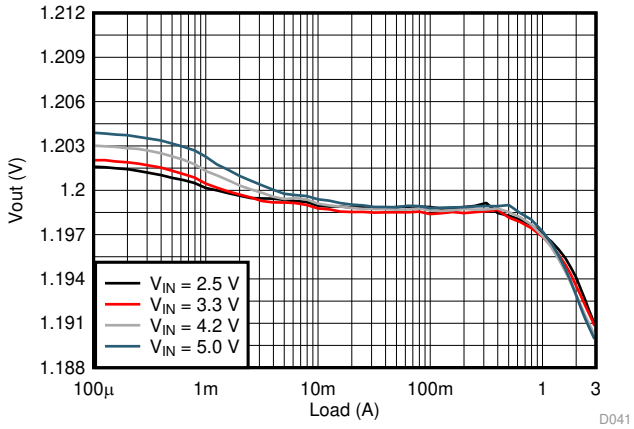

V_{OUT} = 1.2 V

Figure 12. Load Regulation

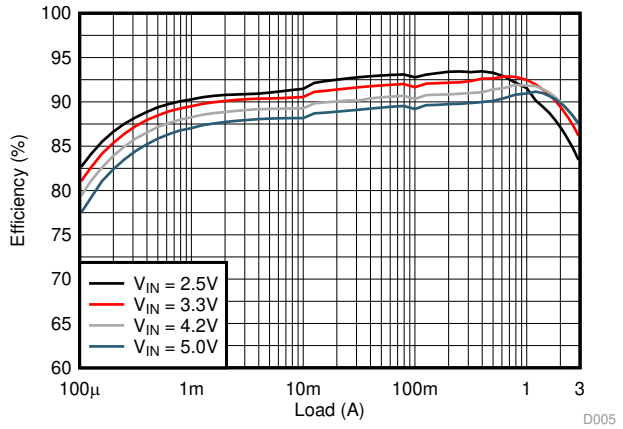

V_{OUT} = 1.8 V

Figure 13. Efficiency

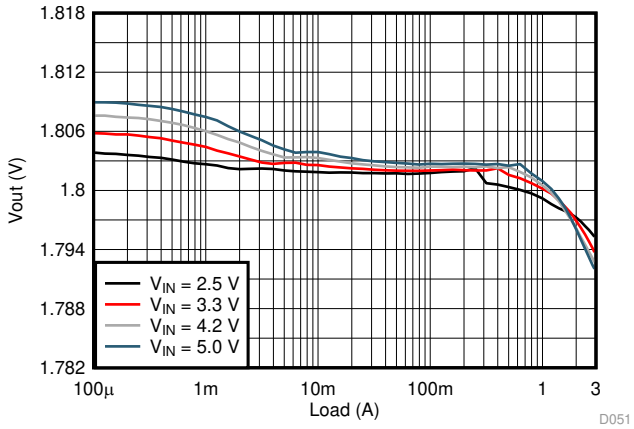

V_{OUT} = 1.8 V

Figure 14. Load Regulation

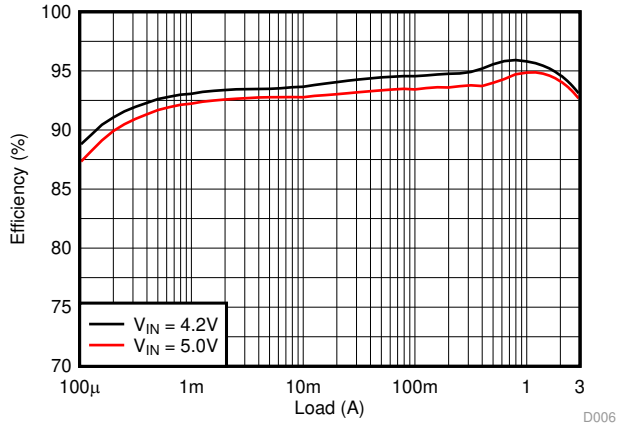

V_{OUT} = 3.3 V

Figure 15. Efficiency

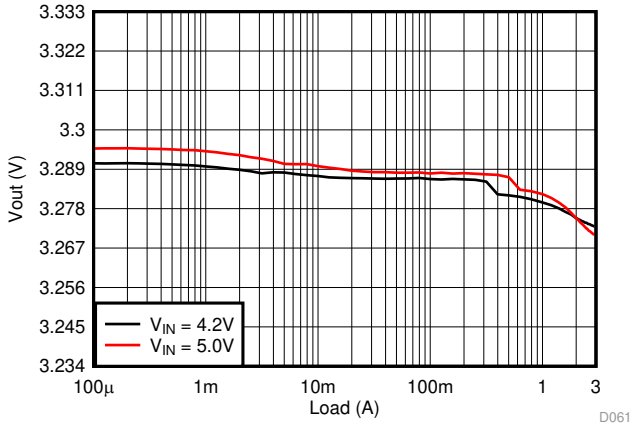

V_{OUT} = 3.3 V

Figure 16. Load Regulation

Copyright © 2017–2019, Texas Instruments Incorporated

V_{IN} = 5.0 V, V_{OUT} = 1.8 V, T_A = 25 ºC, BOM = Table 3, unless otherwise noted.

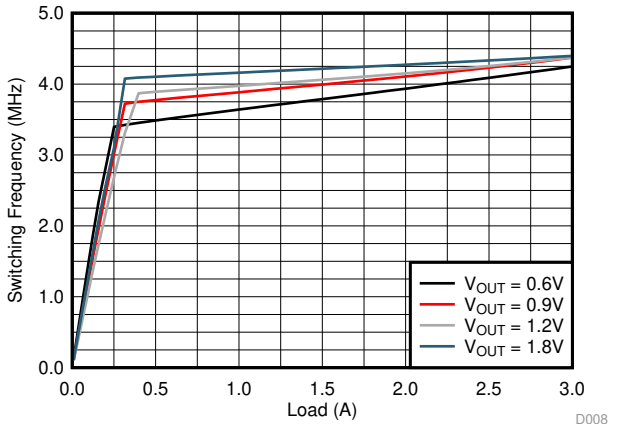

V_{IN} = 3.3 V

Figure 17. Switching Frequency

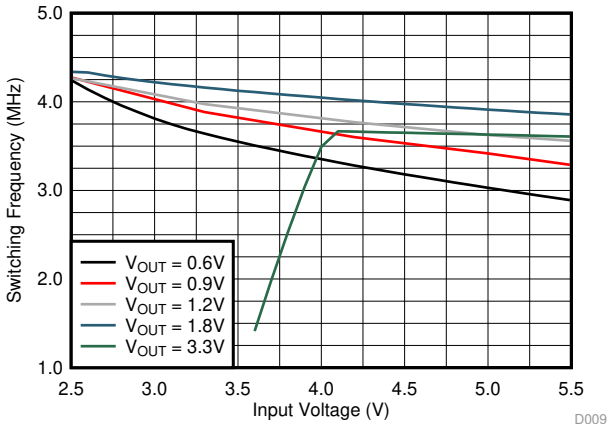

I_{OUT} = 1.0 A

Figure 18. Switching Frequency

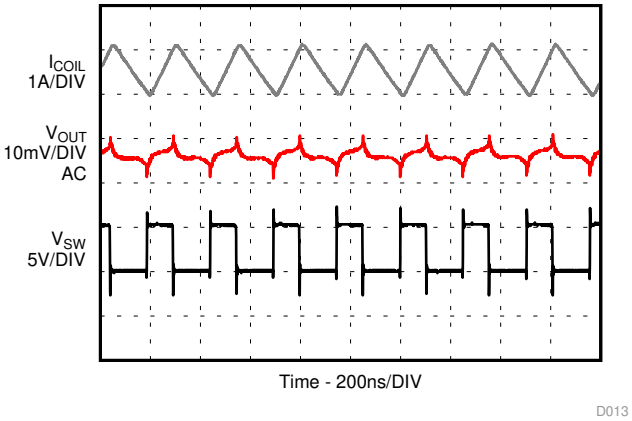

I_{OUT} = 3.0 A

Figure 19. PWM Operation

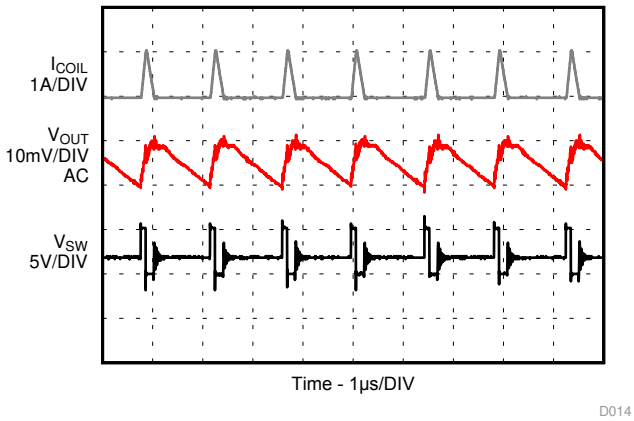

I_{OUT} = 0.1 A

Figure 20. PSM Operation

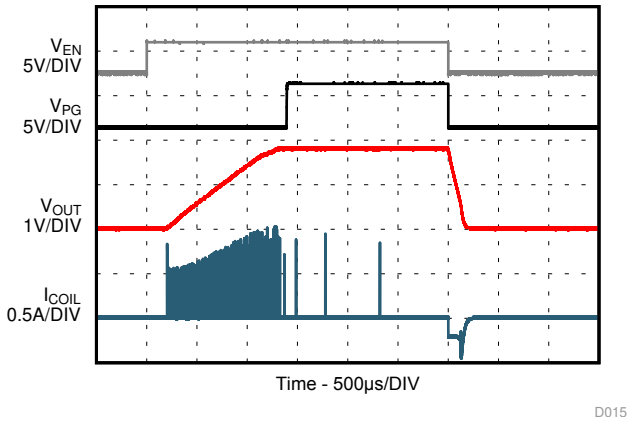

No Load

Figure 21. Startup with No-Load

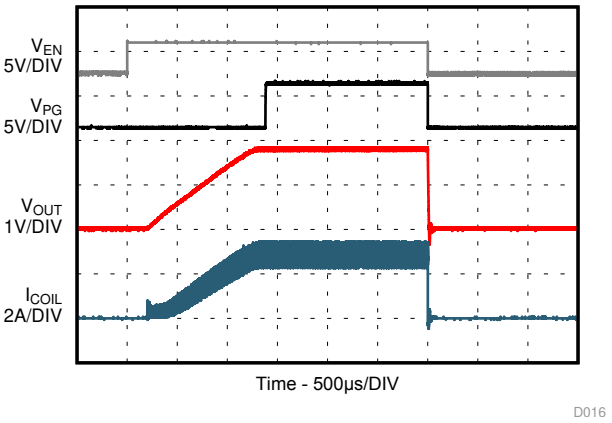

I_{OUT} = 3.0 A

Figure 22. Startup with Load

V_{IN} = 5.0 V, V_{OUT} = 1.8 V, T_A = 25 ºC, BOM = Table 3, unless otherwise noted.

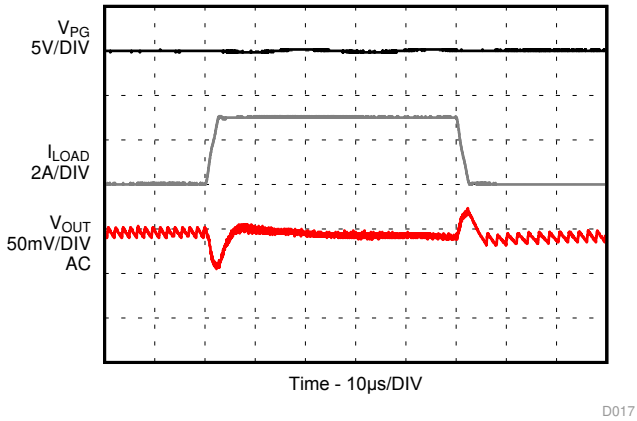

I_{OUT} = 0.1 A to 3 A

Figure 23. Load Transient

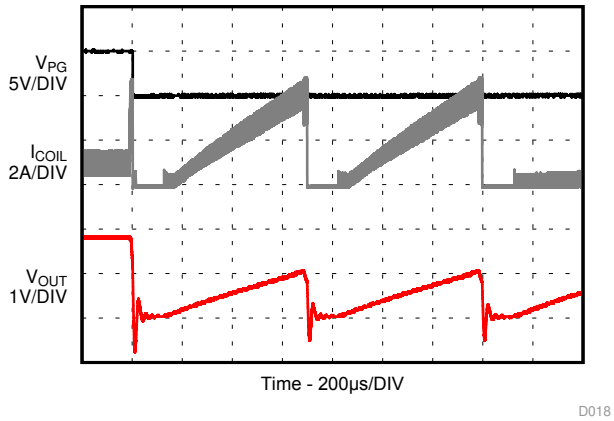

I_{OUT} = 1 A

Figure 24. HICCUP Short Circuit Protection

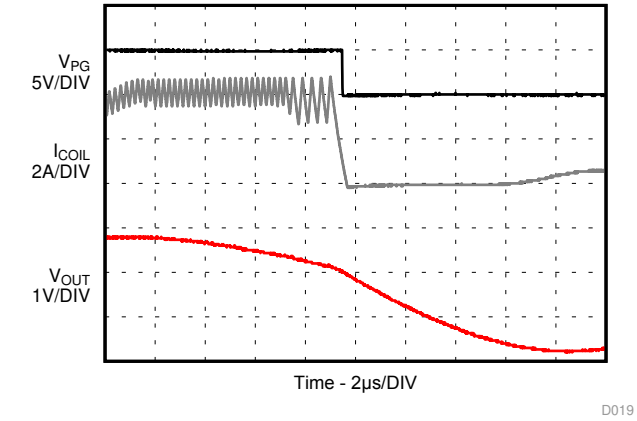

I_{OUT} = 1 A

Figure 25. HICCUP Short Circuit Protection (Zoom In)

10 Power Supply Recommendations

The device is designed to operate from an input voltage supply range from 2.4 V to 5.5 V. Ensure that the input power supply has a sufficient current rating for the application.

11 Layout

11.1 Layout Guidelines

The printed-circuit-board (PCB) layout is an important step to maintain the high performance of the device. See Figure 26 and Figure 27 for the recommended PCB layout.

- The input/output capacitors and the inductor should be placed as close as possible to the IC. This keeps the power traces short. Routing these power traces direct and wide results in low trace resistance and low parasitic inductance.
- The low side of the input and output capacitors must be connected properly to the power GND to avoid a GND potential shift.
- The sense traces connected to FB is a signal trace. Special care should be taken to avoid noise being induced. Keep these traces away from SW nodes. The connection of the output voltage trace for the FB resistors should be made at the output capacitor.
- Refer to Figure 26 and Figure 27 for an example of component placement, routing and thermal design.

Copyright © 2017–2019, Texas Instruments Incorporated

11.2 Layout Example

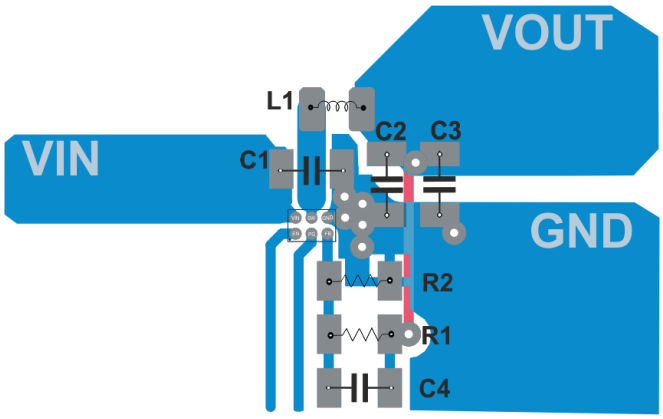

Figure 26. PCB Layout of Adjustable Output Voltage Application

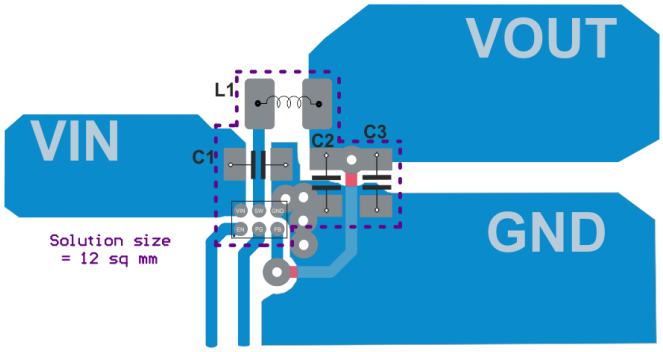

Figure 27. PCB Layout of Fixed Output Voltage Application

11.3 Thermal Considerations

Implementation of integrated circuits in low-profile and fine-pitch surface-mount packages typically requires special attention to power dissipation. Many system-dependent issues such as thermal coupling, airflow, added heat sinks and convection surfaces, and the presence of other heat-generating components affect the power dissipation limits of a given component.

Two basic approaches for enhancing thermal performance are:

- Improving the power dissipation capability of the PCB design
- Introducing airflow in the system

For more details on how to use the thermal parameters, see the *Thermal Characteristics Application Notes*, SZZA017 and SPRA953.

12 Device and Documentation Support

12.1 Device Support

12.1.1 Third-Party Products Disclaimer

TI'S PUBLICATION OF INFORMATION REGARDING THIRD-PARTY PRODUCTS OR SERVICES DOES NOT CONSTITUTE AN ENDORSEMENT REGARDING THE SUITABILITY OF SUCH PRODUCTS OR SERVICES OR A WARRANTY, REPRESENTATION OR ENDORSEMENT OF SUCH PRODUCTS OR SERVICES, EITHER ALONE OR IN COMBINATION WITH ANY TI PRODUCT OR SERVICE.

12.2 Documentation Support

12.2.1 Development Support

12.2.1.1 Custom Design With WEBENCH® Tools

Click here to create a custom design using the TPS62088 device with the WEBENCH® Power Designer.

1. Start by entering the input voltage (V_{IN}), output voltage (V_{OUT}), and output current (I_{OUT}) requirements.
2. Optimize the design for key parameters such as efficiency, footprint, and cost using the optimizer dial.
3. Compare the generated design with other possible solutions from Texas Instruments.

The WEBENCH Power Designer provides a customized schematic along with a list of materials with real-time pricing and component availability.

In most cases, these actions are available:

- Run electrical simulations to see important waveforms and circuit performance
- Run thermal simulations to understand board thermal performance
- Export customized schematic and layout into popular CAD formats
- Print PDF reports for the design, and share the design with colleagues

Get more information about WEBENCH tools at www.ti.com/WEBENCH.

12.2.2 Related Documentation

For related documentation, see the following:

- *Thermal Characteristics Application Note*, SZZA017
- *Thermal Characteristics Application Note*, SPRA953

12.3 Community Resources

TI E2E™ support forums are an engineer's go-to source for fast, verified answers and design help — straight from the experts. Search existing answers or ask your own question to get the quick design help you need.

Linked content is provided "AS IS" by the respective contributors. They do not constitute TI specifications and do not necessarily reflect TI's views; see TI's Terms of Use.

12.4 Trademarks

E2E is a trademark of Texas Instruments.
All other trademarks are the property of their respective owners.

12.5 Electrostatic Discharge Caution

These devices have limited built-in ESD protection. The leads should be shorted together or the device placed in conductive foam during storage or handling to prevent electrostatic damage to the MOS gates.

12.6 Glossary

SLYZ022 — *TI Glossary*.

This glossary lists and explains terms, acronyms, and definitions.

Copyright © 2017–2019, Texas Instruments Incorporated

13 Mechanical, Packaging, and Orderable Information

The following pages include mechanical, packaging, and orderable information. This information is the most current data available for the designated devices. This data is subject to change without notice and revision of this document. For browser-based versions of this data sheet, refer to the left-hand navigation.

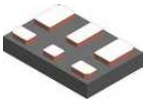

PACKAGE OUTLINE

YWC0006A

PowerWCSP - 0.3 mm max height

POWER CHIP SCALE PACKAGE

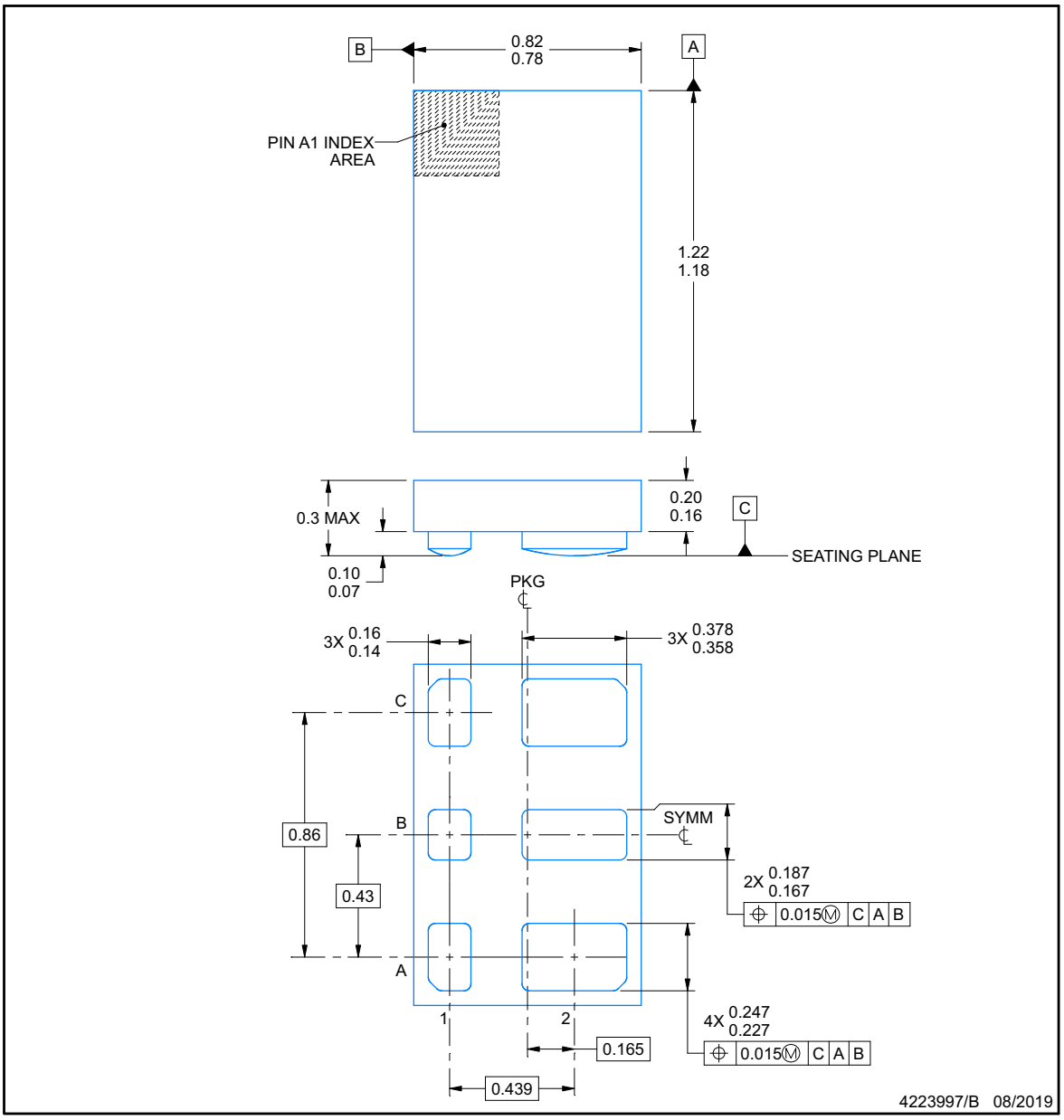

NOTES:

1. All linear dimensions are in millimeters. Any dimensions in parenthesis are for reference only. Dimensioning and tolerancing per ASME Y14.5M.
2. This drawing is subject to change without notice.

Copyright © 2017–2019, Texas Instruments Incorporated

EXAMPLE BOARD LAYOUT

YWC0006A

PowerWCSP - 0.3 mm max height

POWER CHIP SCALE PACKAGE

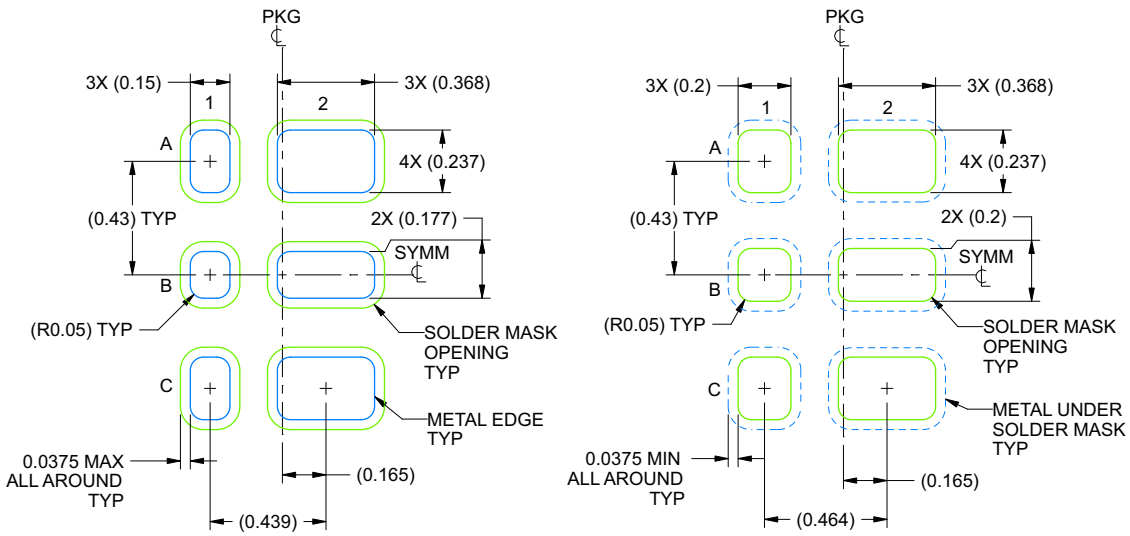

LAND PATTERN EXAMPLE
NON SOLDER MASK DEFINED
SCALE: 40X

LAND PATTERN EXAMPLE
SOLDER MASK DEFINED
SCALE: 40X

4223997/B 08/2019

NOTES: (continued)

3. Final dimensions may vary due to manufacturing tolerance considerations and also routing constraints.
   For more information, see Texas Instruments literature number SLUA271 (www.ti.com/lit/slua271).

Copyright © 2017–2019, Texas Instruments Incorporated

EXAMPLE STENCIL DESIGN

YWC0006A **PowerWCSP - 0.3 mm max height**

POWER CHIP SCALE PACKAGE

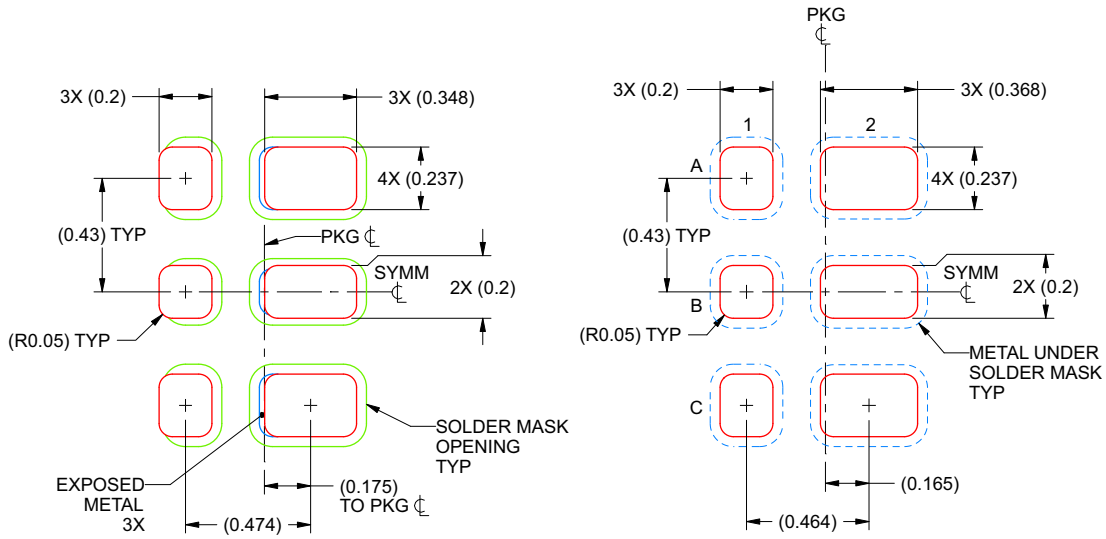

SOLDER PASTE EXAMPLE
NON SOLDER MASK DEFINED
BASED ON 0.075 mm THICK STENCIL
SCALE: 40X

SOLDER PASTE EXAMPLE
SOLDER MASK DEFINED
BASED ON 0.075 mm THICK STENCIL
SCALE: 40X

4223997/B 08/2019

NOTES: (continued)

4. Laser cutting apertures with trapezoidal walls and rounded corners may offer better paste release.

Copyright © 2017–2019, Texas Instruments Incorporated

PACKAGE OUTLINE

YFP0006-C01

DSBGA - 0.5 mm max height

DIE SIZE BALL GRID ARRAY

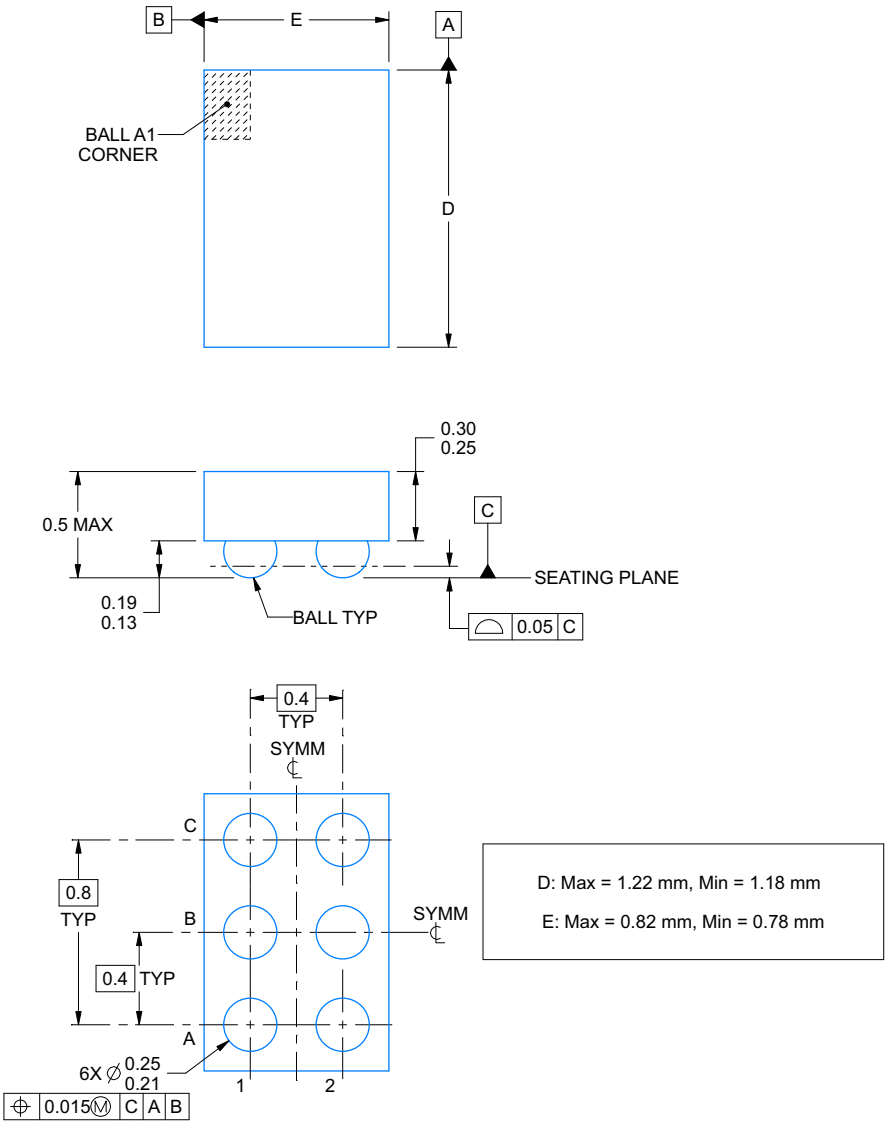

NOTES:

1. All linear dimensions are in millimeters. Any dimensions in parenthesis are for reference only. Dimensioning and tolerancing per ASME Y14.5M.
2. This drawing is subject to change without notice.

Copyright © 2017–2019, Texas Instruments Incorporated

EXAMPLE BOARD LAYOUT

YFP0006-C01 **DSBGA - 0.5 mm max height**

DIE SIZE BALL GRID ARRAY

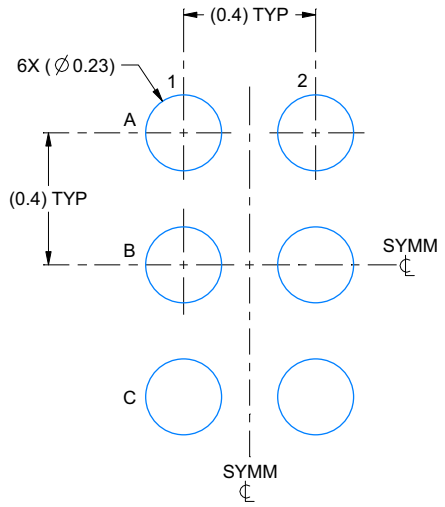

LAND PATTERN EXAMPLE
SCALE:50X

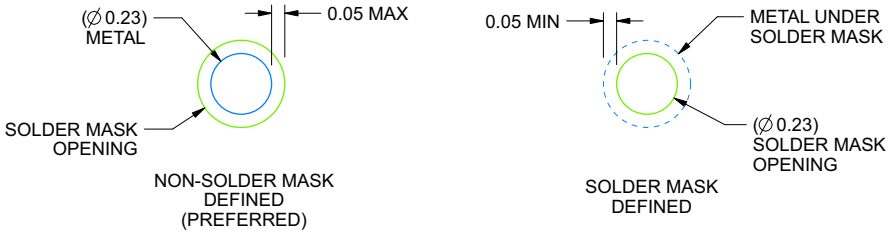

SOLDER MASK DETAILS
NOT TO SCALE

4224455/B 02/2019

NOTES: (continued)

3. Final dimensions may vary due to manufacturing tolerance considerations and also routing constraints. For more information, see Texas Instruments literature number SNVA009 (www.ti.com/lit/snva009).

Copyright © 2017–2019, Texas Instruments Incorporated

EXAMPLE STENCIL DESIGN

YFP0006-C01

DSBGA - 0.5 mm max height

DIE SIZE BALL GRID ARRAY

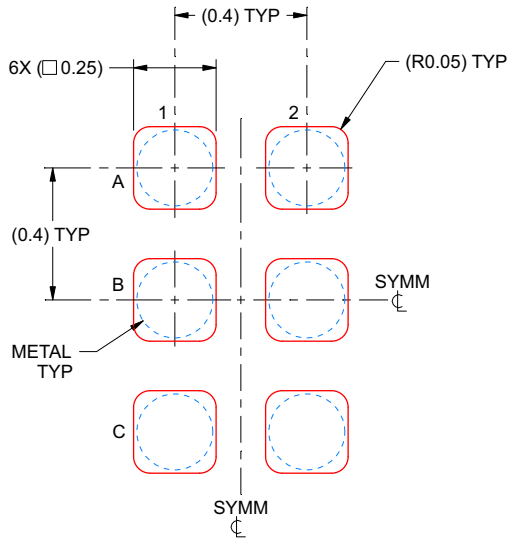

SOLDER PASTE EXAMPLE
BASED ON 0.1 mm THICK STENCIL
SCALE:50X

4224455/B 02/2019

NOTES: (continued)

4. Laser cutting apertures with trapezoidal walls and rounded corners may offer better paste release.

Copyright © 2017–2019, Texas Instruments Incorporated

PACKAGING INFORMATION

Orderable Device	Status (1)	Package Type	Package Drawing	Pins	Package Qty	Eco Plan (2)	Lead/Ball Finish (6)	MSL Peak Temp (3)	Op Temp (°C)	Device Marking (4/5)	Samples
TPS6208812YFPR	ACTIVE	DSBGA	YFP	6	3000	Green (RoHS & no Sb/Br)	SNAGCU	Level-1-260C-UNLIM	-40 to 125	1B5	Samples
TPS6208812YFPT	ACTIVE	DSBGA	YFP	6	250	Green (RoHS & no Sb/Br)	SNAGCU	Level-1-260C-UNLIM	-40 to 125	1B5	Samples
TPS6208818YFPR	ACTIVE	DSBGA	YFP	6	3000	Green (RoHS & no Sb/Br)	SNAGCU	Level-1-260C-UNLIM	-40 to 125	1B6	Samples
TPS6208818YFPT	ACTIVE	DSBGA	YFP	6	250	Green (RoHS & no Sb/Br)	SNAGCU	Level-1-260C-UNLIM	-40 to 125	1B6	Samples
TPS6208833YFPR	ACTIVE	DSBGA	YFP	6	3000	Green (RoHS & no Sb/Br)	SNAGCU	Level-1-260C-UNLIM	-40 to 125	1B7	Samples
TPS6208833YFPT	ACTIVE	DSBGA	YFP	6	250	Green (RoHS & no Sb/Br)	SNAGCU	Level-1-260C-UNLIM	-40 to 125	1B7	Samples
TPS62088YFPR	ACTIVE	DSBGA	YFP	6	3000	Green (RoHS & no Sb/Br)	SNAGCU	Level-1-260C-UNLIM	-40 to 125	15X	Samples
TPS62088YFPT	ACTIVE	DSBGA	YFP	6	250	Green (RoHS & no Sb/Br)	SNAGCU	Level-1-260C-UNLIM	-40 to 125	15X	Samples
TPS62088YWCR	ACTIVE	DSBGA	YWC	6	3000	Green (RoHS & no Sb/Br)	Call TI	Level-1-260C-UNLIM	-40 to 125	1GB	Samples
XPS62088YWCR	ACTIVE	DSBGA	YWC	6	3000	TBD	Call TI	Call TI	-40 to 125		Samples

(1) The marketing status values are defined as follows:
ACTIVE: Product device recommended for new designs.
LIFEBUY: TI has announced that the device will be discontinued, and a lifetime-buy period is in effect.
NRND: Not recommended for new designs. Device is in production to support existing customers, but TI does not recommend using this part in a new design.
PREVIEW: Device has been announced but is not in production. Samples may or may not be available.
OBSOLETE: TI has discontinued the production of the device.

(2) **RoHS:** TI defines "RoHS" to mean semiconductor products that are compliant with the current EU RoHS requirements for all 10 RoHS substances, including the requirement that RoHS substance do not exceed 0.1% by weight in homogeneous materials. Where designed to be soldered at high temperatures, "RoHS" products are suitable for use in specified lead-free processes. TI may reference these types of products as "Pb-Free".
RoHS Exempt: TI defines "RoHS Exempt" to mean products that contain lead but are compliant with EU RoHS pursuant to a specific EU RoHS exemption.
Green: TI defines "Green" to mean the content of Chlorine (Cl) and Bromine (Br) based flame retardants meet JS709B low halogen requirements of <=1000ppm threshold. Antimony trioxide based flame retardants must also meet the <=1000ppm threshold requirement.

(3) MSL, Peak Temp. - The Moisture Sensitivity Level rating according to the JEDEC industry standard classifications, and peak solder temperature.

(4) There may be additional marking, which relates to the logo, the lot trace code information, or the environmental category on the device.

(5) Multiple Device Markings will be inside parentheses. Only one Device Marking contained in parentheses and separated by a "~" will appear on a device. If a line is indented then it is a continuation of the previous line and the two combined represent the entire Device Marking for that device.

(6) Lead/Ball Finish - Orderable Devices may have multiple material finish options. Finish options are separated by a vertical ruled line. Lead/Ball Finish values may wrap to two lines if the finish value exceeds the maximum column width.

Important Information and Disclaimer: The information provided on this page represents TI's knowledge and belief as of the date that it is provided. TI bases its knowledge and belief on information provided by third parties, and makes no representation or warranty as to the accuracy of such information. Efforts are underway to better integrate information from third parties. TI has taken and continues to take reasonable steps to provide representative and accurate information but may not have conducted destructive testing or chemical analysis on incoming materials and chemicals. TI and TI suppliers consider certain information to be proprietary, and thus CAS numbers and other limited information may not be available for release.

In no event shall TI's liability arising out of such information exceed the total purchase price of the TI part(s) at issue in this document sold by TI to Customer on an annual basis.

TAPE AND REEL INFORMATION

REEL DIMENSIONS

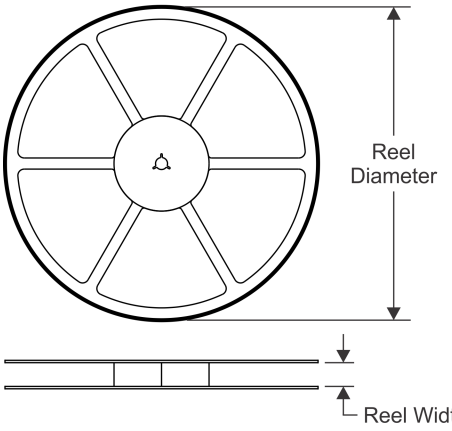

TAPE DIMENSIONS

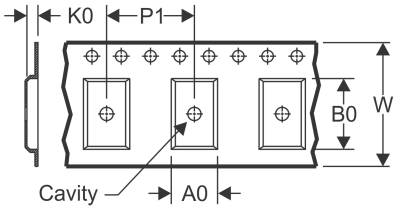

A0	Dimension designed to accommodate the component width
B0	Dimension designed to accommodate the component length
K0	Dimension designed to accommodate the component thickness
W	Overall width of the carrier tape
P1	Pitch between successive cavity centers

QUADRANT ASSIGNMENTS FOR PIN 1 ORIENTATION IN TAPE

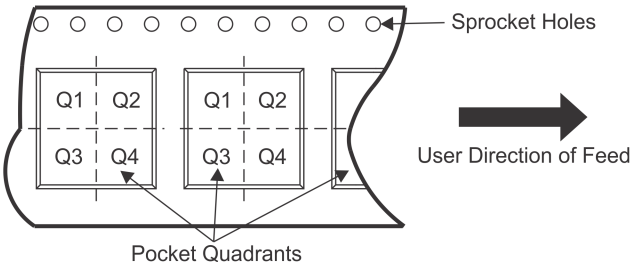

*All dimensions are nominal

Device	Package Type	Package Drawing	Pins	SPQ	Reel Diameter (mm)	Reel Width W1 (mm)	A0 (mm)	B0 (mm)	K0 (mm)	P1 (mm)	W (mm)	Pin1 Quadrant
TPS6208812YFPR	DSBGA	YFP	6	3000	180.0	8.4	0.97	1.37	0.6	4.0	8.0	Q1
TPS6208812YFPT	DSBGA	YFP	6	250	180.0	8.4	0.97	1.37	0.6	4.0	8.0	Q1
TPS6208818YFPR	DSBGA	YFP	6	3000	180.0	8.4	0.97	1.37	0.6	4.0	8.0	Q1
TPS6208818YFPT	DSBGA	YFP	6	250	180.0	8.4	0.97	1.37	0.6	4.0	8.0	Q1
TPS6208833YFPR	DSBGA	YFP	6	3000	180.0	8.4	0.97	1.37	0.6	4.0	8.0	Q1
TPS6208833YFPT	DSBGA	YFP	6	250	180.0	8.4	0.97	1.37	0.6	4.0	8.0	Q1
TPS62088YFPR	DSBGA	YFP	6	3000	180.0	8.4	0.97	1.37	0.6	4.0	8.0	Q1
TPS62088YFPT	DSBGA	YFP	6	250	180.0	8.4	0.97	1.37	0.6	4.0	8.0	Q1
TPS62088YWCR	DSBGA	YWC	6	3000	180.0	8.4	0.95	1.35	0.38	4.0	8.0	Q1

TAPE AND REEL BOX DIMENSIONS

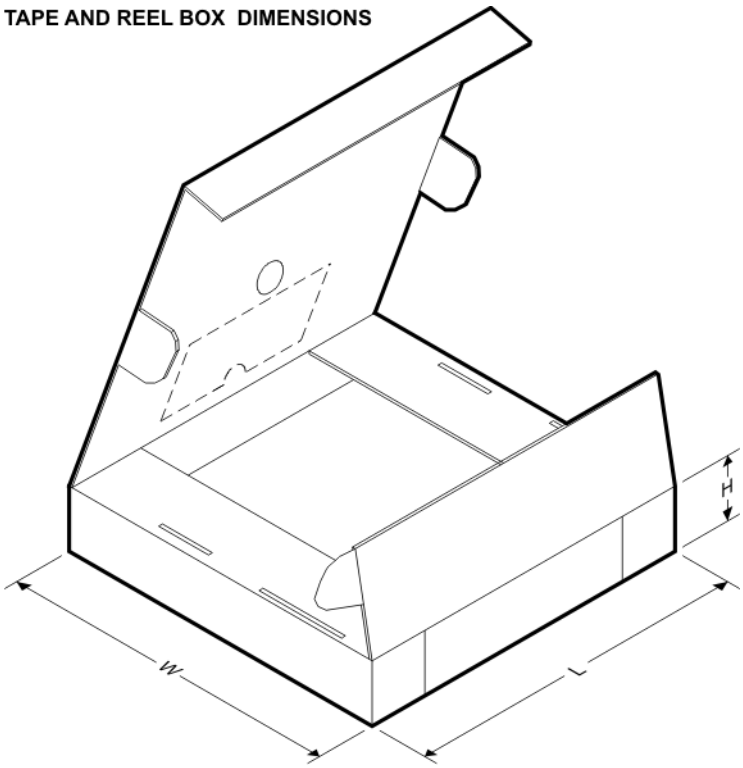

*All dimensions are nominal

Device	Package Type	Package Drawing	Pins	SPQ	Length (mm)	Width (mm)	Height (mm)
TPS6208812YFPR	DSBGA	YFP	6	3000	182.0	182.0	20.0
TPS6208812YFPT	DSBGA	YFP	6	250	210.0	185.0	35.0
TPS6208818YFPR	DSBGA	YFP	6	3000	210.0	185.0	35.0
TPS6208818YFPT	DSBGA	YFP	6	250	210.0	185.0	35.0
TPS6208833YFPR	DSBGA	YFP	6	3000	182.0	182.0	20.0
TPS6208833YFPT	DSBGA	YFP	6	250	210.0	185.0	35.0
TPS62088YFPR	DSBGA	YFP	6	3000	182.0	182.0	20.0
TPS62088YFPT	DSBGA	YFP	6	250	182.0	182.0	20.0
TPS62088YWCR	DSBGA	YWC	6	3000	182.0	182.0	20.0

IMPORTANT NOTICE AND DISCLAIMER

TI PROVIDES TECHNICAL AND RELIABILITY DATA (INCLUDING DATASHEETS), DESIGN RESOURCES (INCLUDING REFERENCE DESIGNS), APPLICATION OR OTHER DESIGN ADVICE, WEB TOOLS, SAFETY INFORMATION, AND OTHER RESOURCES “AS IS” AND WITH ALL FAULTS, AND DISCLAIMS ALL WARRANTIES, EXPRESS AND IMPLIED, INCLUDING WITHOUT LIMITATION ANY IMPLIED WARRANTIES OF MERCHANTABILITY, FITNESS FOR A PARTICULAR PURPOSE OR NON-INFRINGEMENT OF THIRD PARTY INTELLECTUAL PROPERTY RIGHTS.

These resources are intended for skilled developers designing with TI products. You are solely responsible for (1) selecting the appropriate TI products for your application, (2) designing, validating and testing your application, and (3) ensuring your application meets applicable standards, and any other safety, security, or other requirements. These resources are subject to change without notice. TI grants you permission to use these resources only for development of an application that uses the TI products described in the resource. Other reproduction and display of these resources is prohibited. No license is granted to any other TI intellectual property right or to any third party intellectual property right. TI disclaims responsibility for, and you will fully indemnify TI and its representatives against, any claims, damages, costs, losses, and liabilities arising out of your use of these resources.

TI’s products are provided subject to TI’s Terms of Sale (www.ti.com/legal/termsofsale.html) or other applicable terms available either on ti.com or provided in conjunction with such TI products. TI’s provision of these resources does not expand or otherwise alter TI’s applicable warranties or warranty disclaimers for TI products.

Mailing Address: Texas Instruments, Post Office Box 655303, Dallas, Texas 75265
Copyright © 2019, Texas Instruments Incorporated